Kart Programming

Pierre Roduit | François Corthay
Christopher Metrailler | Oliver Gubler | Michael Clausen

Goals

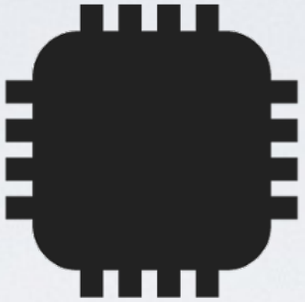

Use basic elements seen in ELN course.

Use basic elements seen in INF I course.

Goals

Galaxy Nexus

Bluetooth

Kart

Modular concept

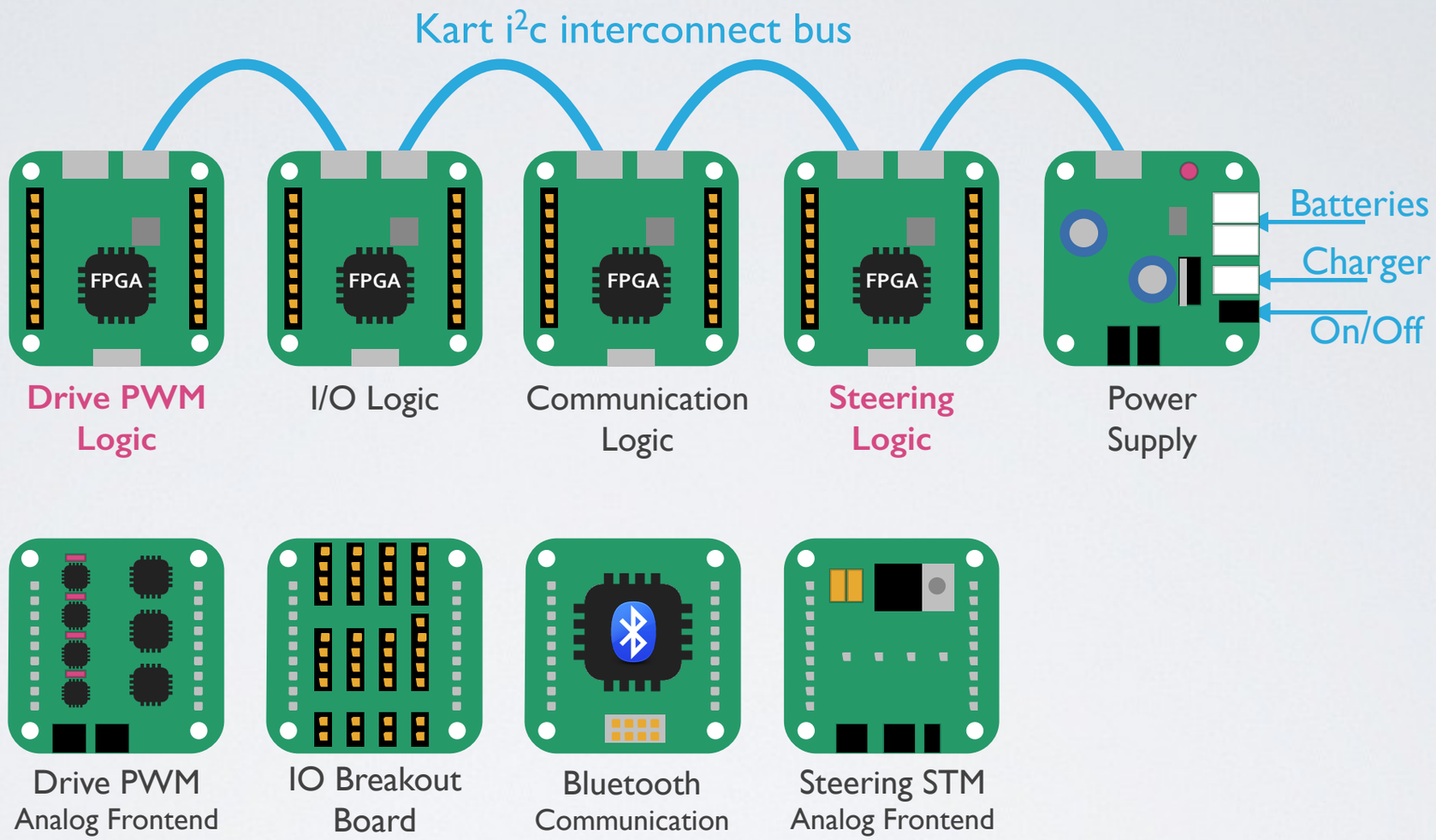

Generic FPGA Board

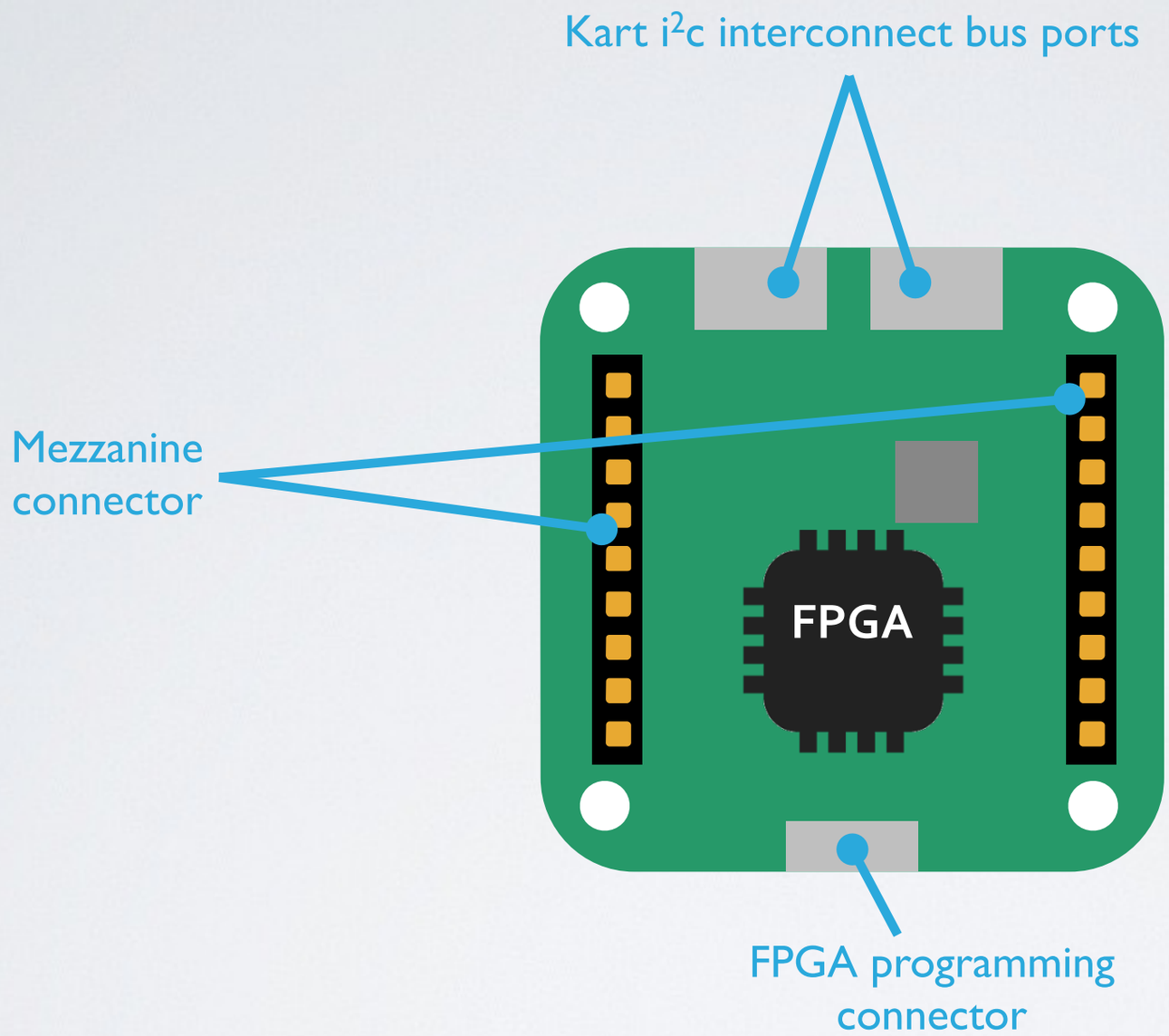

Stepper Motor

Kart i²c interconnect bus

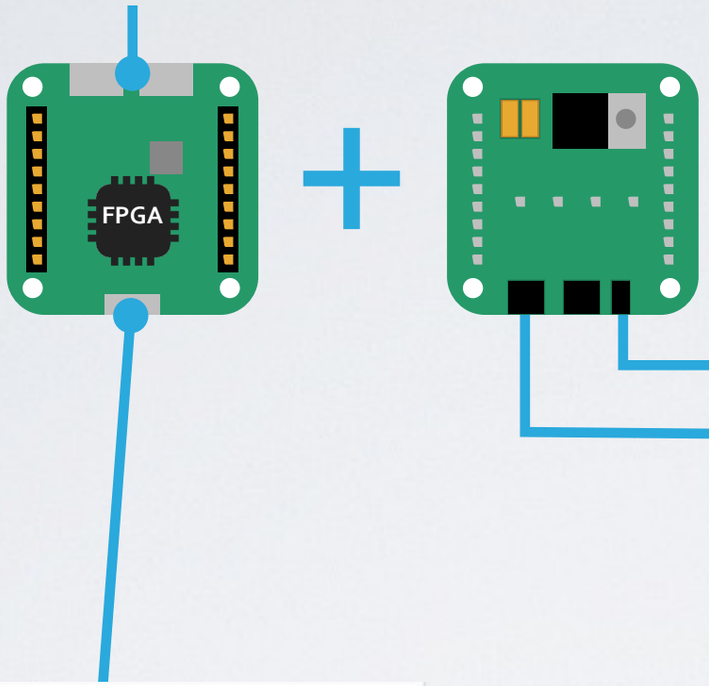

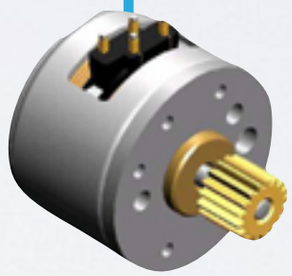

Stepper motor

Limit switch

```
--------------------------------------------------------------------------------
-- Company: Young Embedded Systems LLC
-- Engineer: Gene Breniman
-- Module Name:    ARM_SEQ_RAM- - Behavioral
-- Revisions:
--    0.01 - 07/02/2007 File Created
-- Additional Comments:
--
--------------------------------------------------------------------------------
library IEEE;
use IEEE.STD_LOGIC_1164.ALL;
use IEEE.STD_LOGIC_ARITH.ALL;
use IEEE.STD_LOGIC_UNSIGNED.ALL;

entity ClkDiv is
    Port (  InByte : in STD_LOGIC_VECTOR(3 downto 0);       --<-- Seq_CPLD
            RegSel : in STD_LOGIC_VECTOR(1 downto 0);       --<-- Seq_CPLD
            RegStrb : in STD_LOGIC;                         --<-- Seq_CPLD
            MClk : in  STD_LOGIC;                           --<-- OSC
            SeqReset : in STD_LOGIC;                        --<-- Power Monitor
            ADC_Clk : out STD_LOGIC);                       -->-- ADC
end ClkDiv;

architecture Behavioral of ClkDiv is
   signal   ADC_div :      STD_LOGIC_VECTOR(5 downto 0) := "001111";
   signal   ADCClk :       STD_LOGIC := '0';
   signal   ClkSel :       STD_LOGIC_VECTOR(2 downto 0) := "100";

begin

   ClkDivP : process(Mclk,SeqReset)
      begin
      if SeqReset = '0' then
         ADCClk <= '0';
         ADC_div <= "001001";
      elsif Mclk = '0' and Mclk'event then
         if ADC_div = "000000" then
            ADCClk <= not(ADCClk);
            case ClkSel is
               when "000" =>                    -- 20MHz - divide by 2
               when "001" =>                    -- 10MHz
                  ADC_div <= "000001";             -- divide by 4
               when "010" =>                    -- 4MHz
                  ADC_div <= "000100";             -- divide by 10
               when "011" =>                    -- 2MHz
                  ADC_div <= "001001";             -- divide by 20
               when "100" =>                    -- 1MHz
                  ADC_div <= "001001";             -- divide by 40
               when others =>                   -- 400KHz
```

Stepper motor control

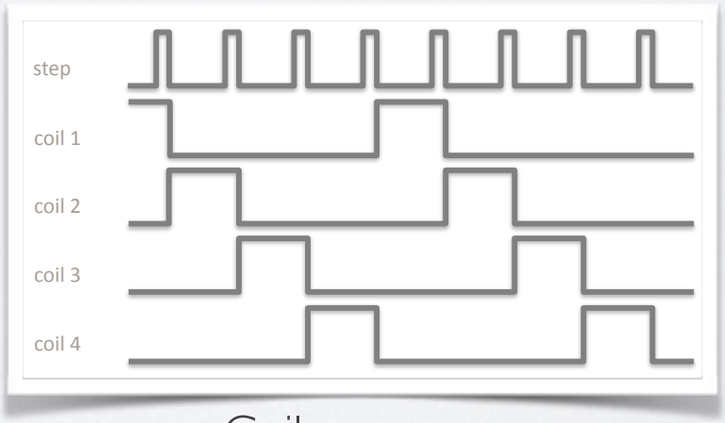

Coil sequence

Drive Motor

Kart i²c interconnect bus

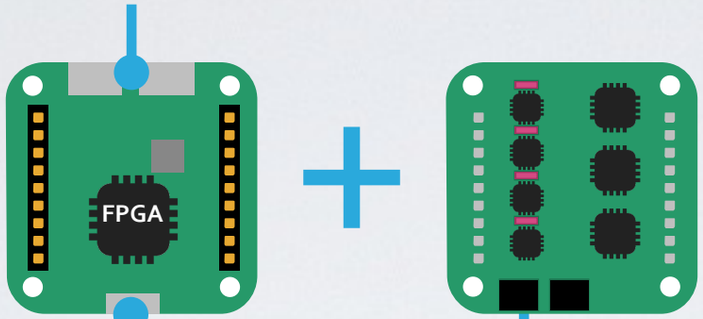

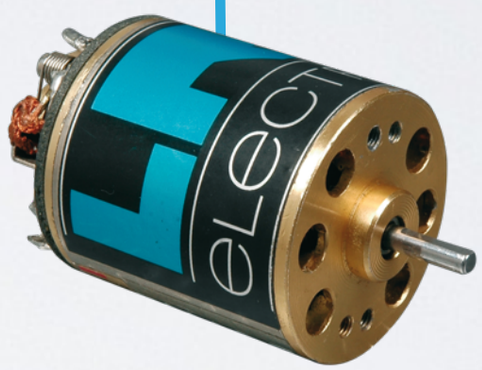

Drive motor

```
1
2  -- Company: Young Embedded Systems LLC
3  -- Engineer: Gene Breniman
4  -- Module Name:    ARM_SEQ_RAM- - Behavioral
5  -- Revisions:
6  --    0.01 - 07/02/2007 File Created
7  -- Additional Comments:
8  --
9  ----------------------------------------------------------------------------------
10 library IEEE;
11 use IEEE.STD_LOGIC_1164.ALL;
12 use IEEE.STD_LOGIC_ARITH.ALL;
13 use IEEE.STD_LOGIC_UNSIGNED.ALL;
14
15 entity ClkDiv is
16     Port (  InByte : in STD_LOGIC_VECTOR(3 downto 0);       --<-- Seq_CPLD
17             RegSel : in STD_LOGIC_VECTOR(1 downto 0);       --<-- Seq_CPLD
18             RegStrb : in STD_LOGIC;                         --<-- Seq_CPLD
19             Mclk : in  STD_LOGIC;                           --<-- OSC
20             SeqReset : in STD_LOGIC;                        --<-- Power Monitor
21             ADC_Clk : out STD_LOGIC);                       -->-- ADC
22 end ClkDiv;
23
24 architecture Behavioral of ClkDiv is
25    signal   ADC_div :      STD_LOGIC_VECTOR(5 downto 0) := "001111";
26    signal   ADCClk :       STD_LOGIC := '0';
27    signal   ClkSel :       STD_LOGIC_VECTOR(2 downto 0) := "100";
28
29 begin
30
31    ClkDivP : process(Mclk,SeqReset)
32       begin
33       if SeqReset = '0' then
34          ADCClk <= '0';
35          ADC_div <= "001001";
36       elsif Mclk = '0' and Mclk'event then
37          if ADC_div = "000000" then
38             ADCClk <= not(ADCClk);
39             case ClkSel is
40                when "000" =>                    -- 20MHz - divide by 2
41                when "001" =>                    -- 10MHz
42                   ADC_div <= "000001";             -- divide by 4
43                when "010" =>                    -- 4MHz
44                   ADC_div <= "000100";             -- divide by 10
45                when "011" =>                    -- 2MHz
46                   ADC_div <= "001001";             -- divide by 20
47                when "100" =>                    -- 1MHz
48                   ADC_div <= "001001";             -- divide by 40
49                when others =>                   -- 400KHz
```

Drive PWM control

IO Board

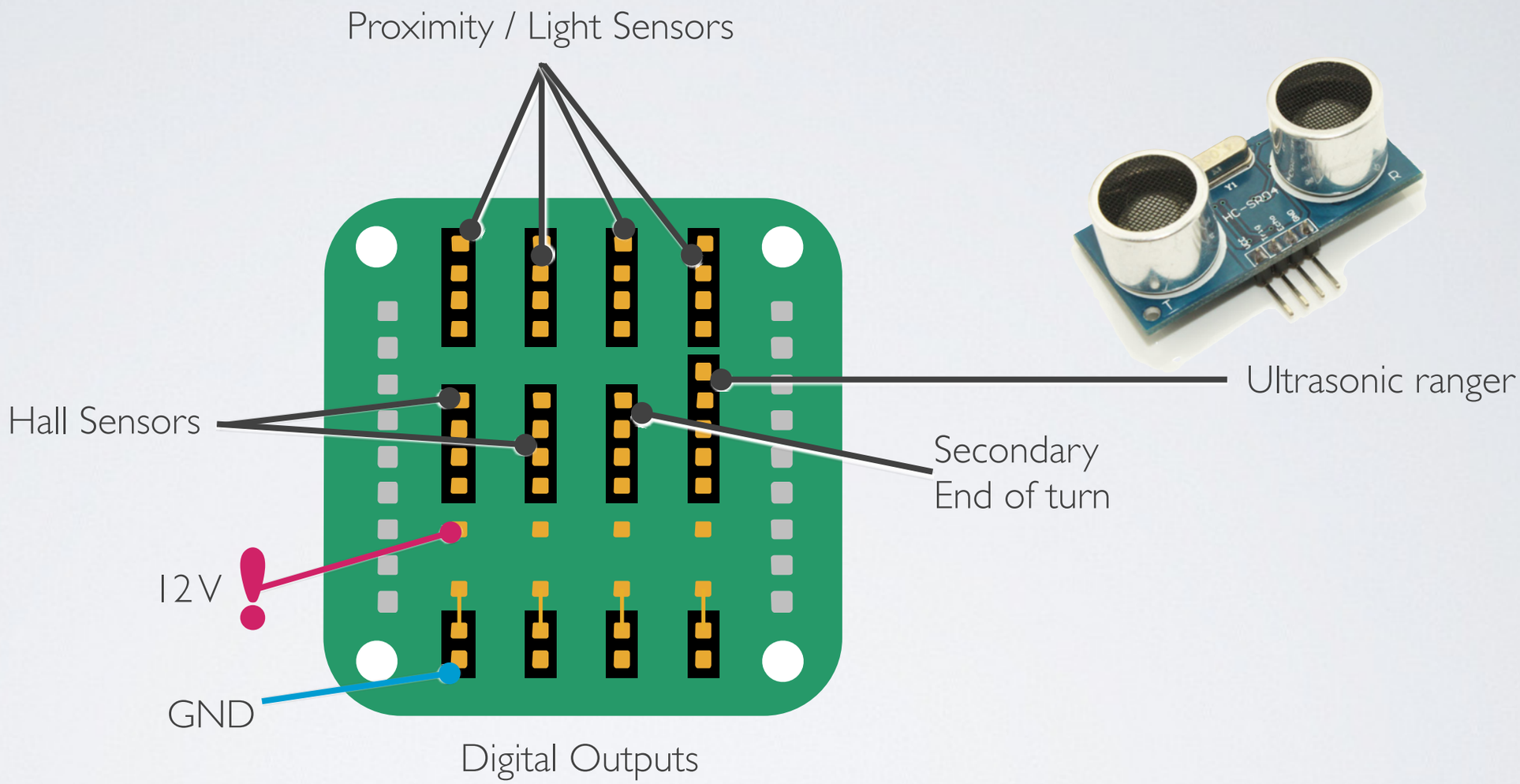
Proximity / Light Sensors
Ultrasonic ranger
Hall Sensors
Secondary
End of turn
12V
GND
Digital Outputs

Avoid Hardware Damages

Double-check that the cable/connector are connected correctly.

Never connect JTAG connector cable here.

Power the circuit using a laboratory power supply.

The batteries should never be connected during development!

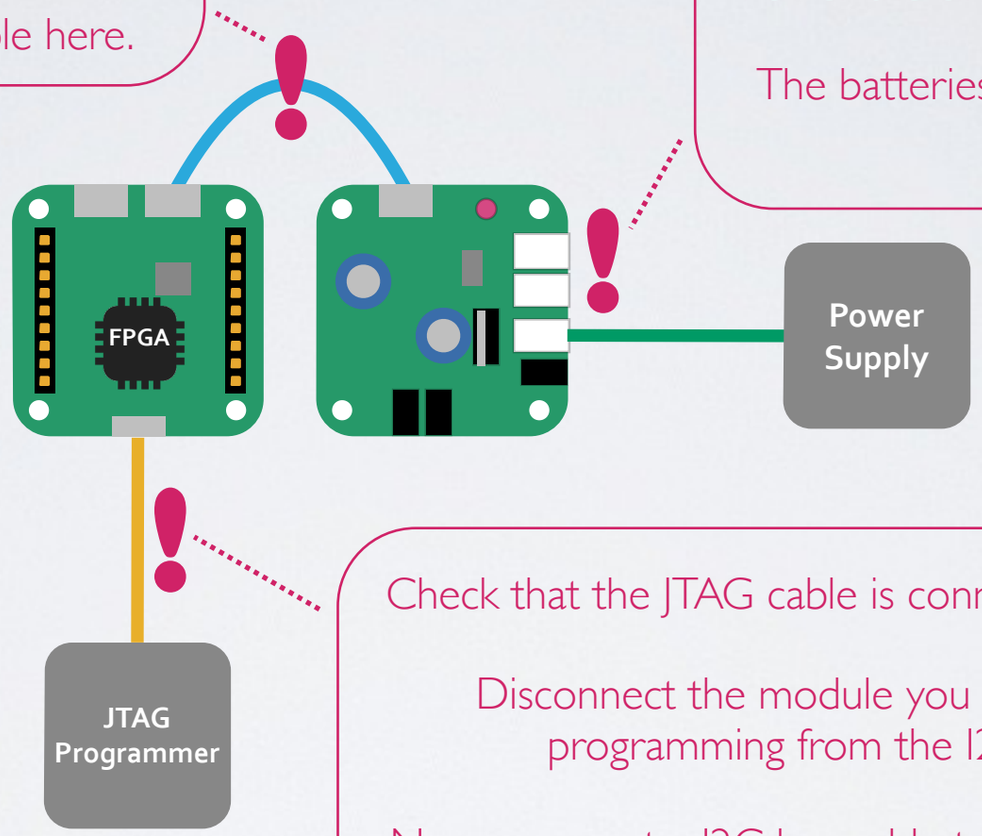

Check that the JTAG cable is connected correctly!

Disconnect the module you are actually programming from the I2C bus!

Never connect a I2C bus cable to this connector!

If you connect something wrong, the FPGA might be **damaged**.

The costs to change a FPGA are about **50 SFr**.

You will be charged for the reparation if you did not follow this guidelines!

Hardware Goals

- **Control block for DC motor**
  - Pulse Width Modulation (PWM) generator
- **Control block for stepper motor**
  - 4 Coil forward/backward sequence generator
- **Various sensors and actuators**
- **Anti-collision emergency stop**
  - IR distance sensors

Hardware Grade

Presentation of blocks and simulation results during morning of the last day

All mandatory features

Direction Stepper control
Speed PWM control
Hall sensor counter

→ 4.0

+

1 ← **Per optional feature**

Ultrasound sensor
Emergency Stop (Proximity sensor)
Other improvements

=

Grade

Remote Control Protocol

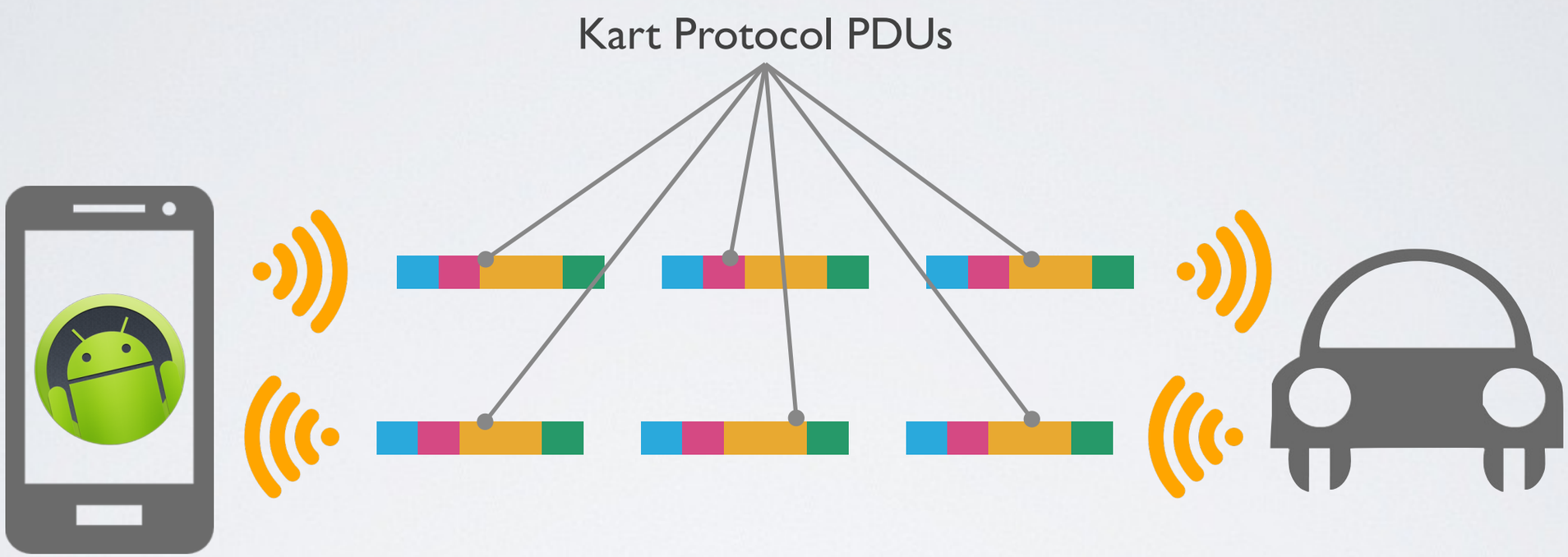

Remote Control Protocol PDU

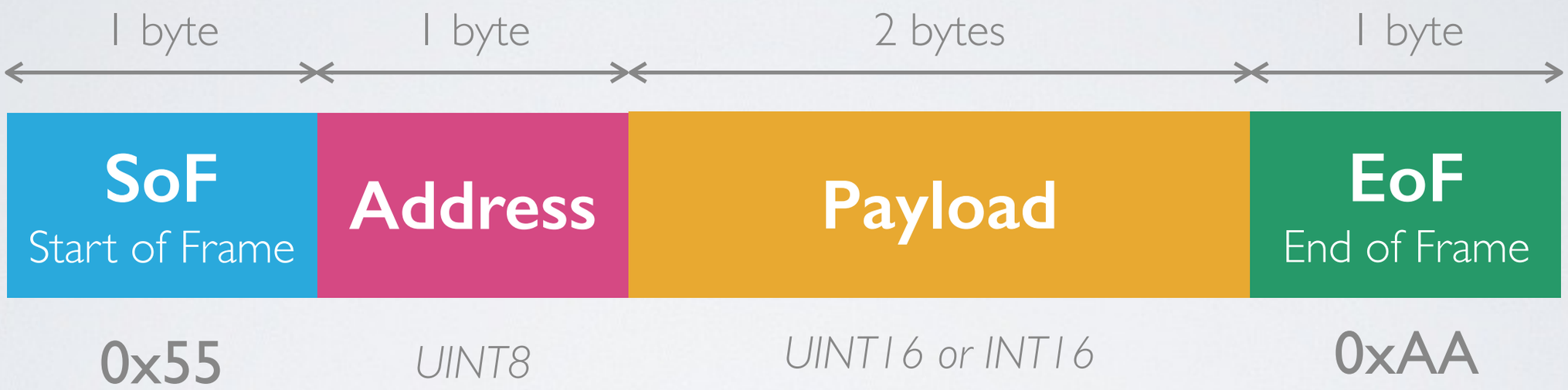

Remote Control Protocol Addresses

Address	Type	Description
0x00	*UINT16*	Drive motor PWM period.
0x01	*INT5*	Drive motor speed [-15..15] (negative=backwards).
0x02	*UINT16*	Steering motor step period (speed proportional to 1/period).
0x03	*UINT16*	Steering position set point.
0x04	*UINT5*	Steering end switch address.
0x05	*UINT5*	Hardware settings (Enumeration mask).
0x06	*UINT4*	LED control.
0x15	*UINT16*	Update interval (from kart to phone) in ms.

Remote Control Protocol Addresses

Address	Type	Description
0x00	UINT16	Hall sensor 1 speed count.
0x01	UINT16	Hall sensor 2 speed count.
0x02	UINT1	Steering angle reached (1=reached, 0=busy).
0x03	UINT16	Actual steering position.
0x04	UINT1	Steering end contact state (0=contact closed).
0x05	UINT16	ADC value of battery voltage level.
0x06	UINT16	Distance (Ultrasonic sensor)
0x08	UINT16	Proximity 1 (IR sensor)
0x09	UINT16	Proximity 2 (IR sensor)
0x0A	UINT16	Proximity 3 (IR sensor)
0x0B	UINT16	Proximity 4 (IR sensor)
0x0C	UINT16	Ambient Light 1 (IR sensor)
0x0D	UINT16	Ambient Light 2 (IR sensor)
0x0E	UINT16	Ambient Light 3 (IR sensor)
0c0F	UINT16	Ambient Light 4 (IR sensor)

Remote Control Android App

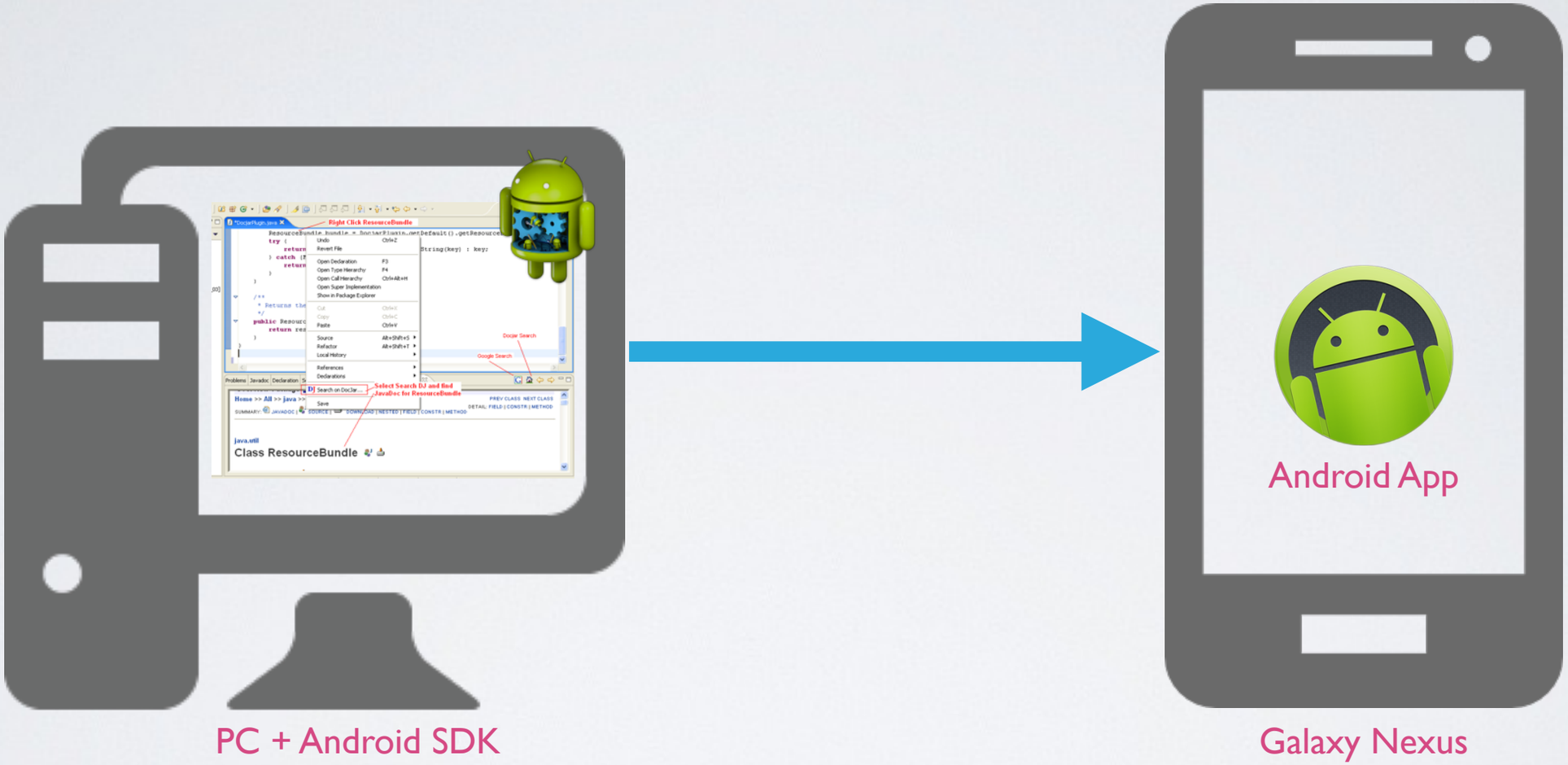

Remote Control Android App

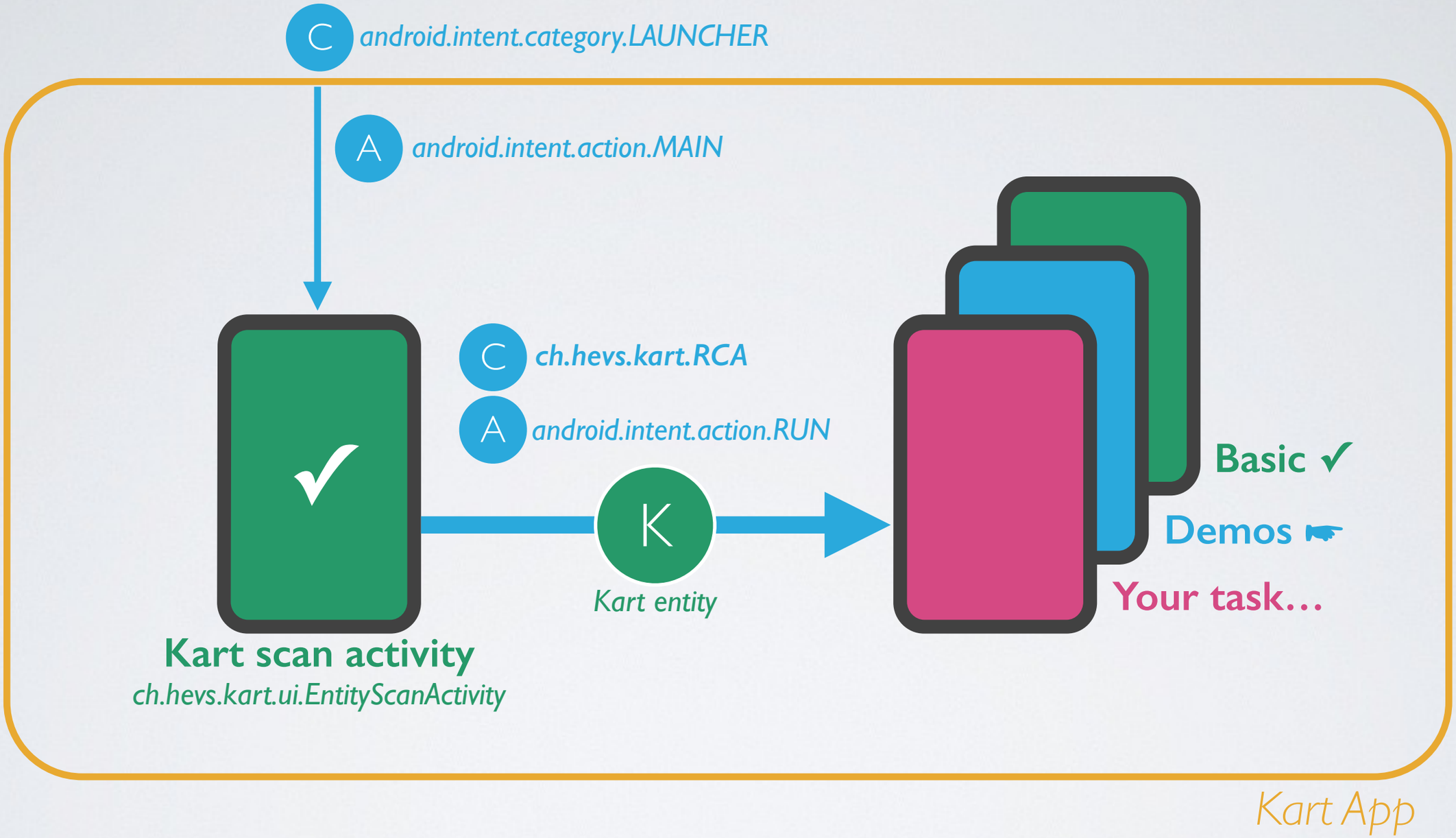

Remote Control Android App

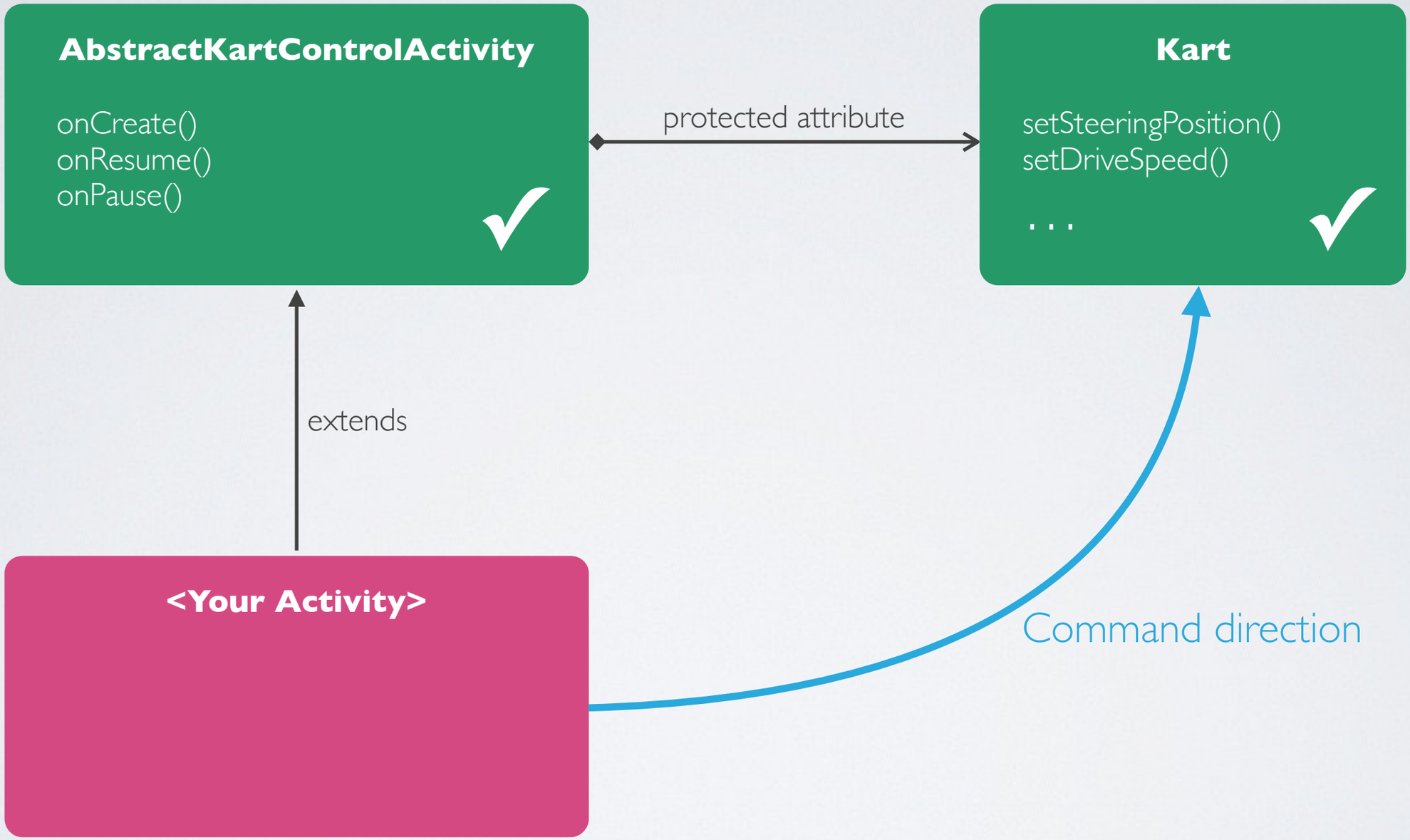

Remote Control Android App

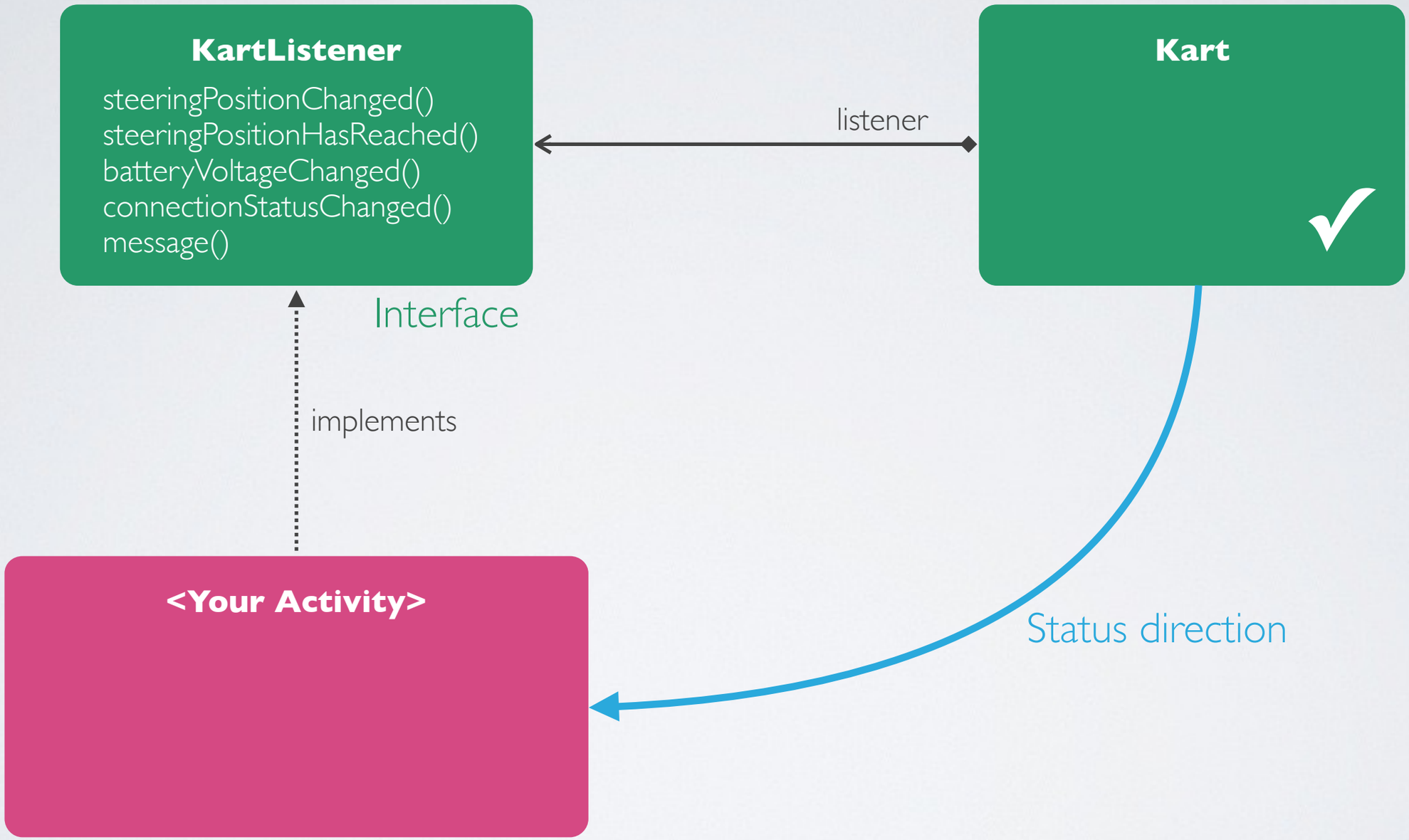

Remote Control Android App

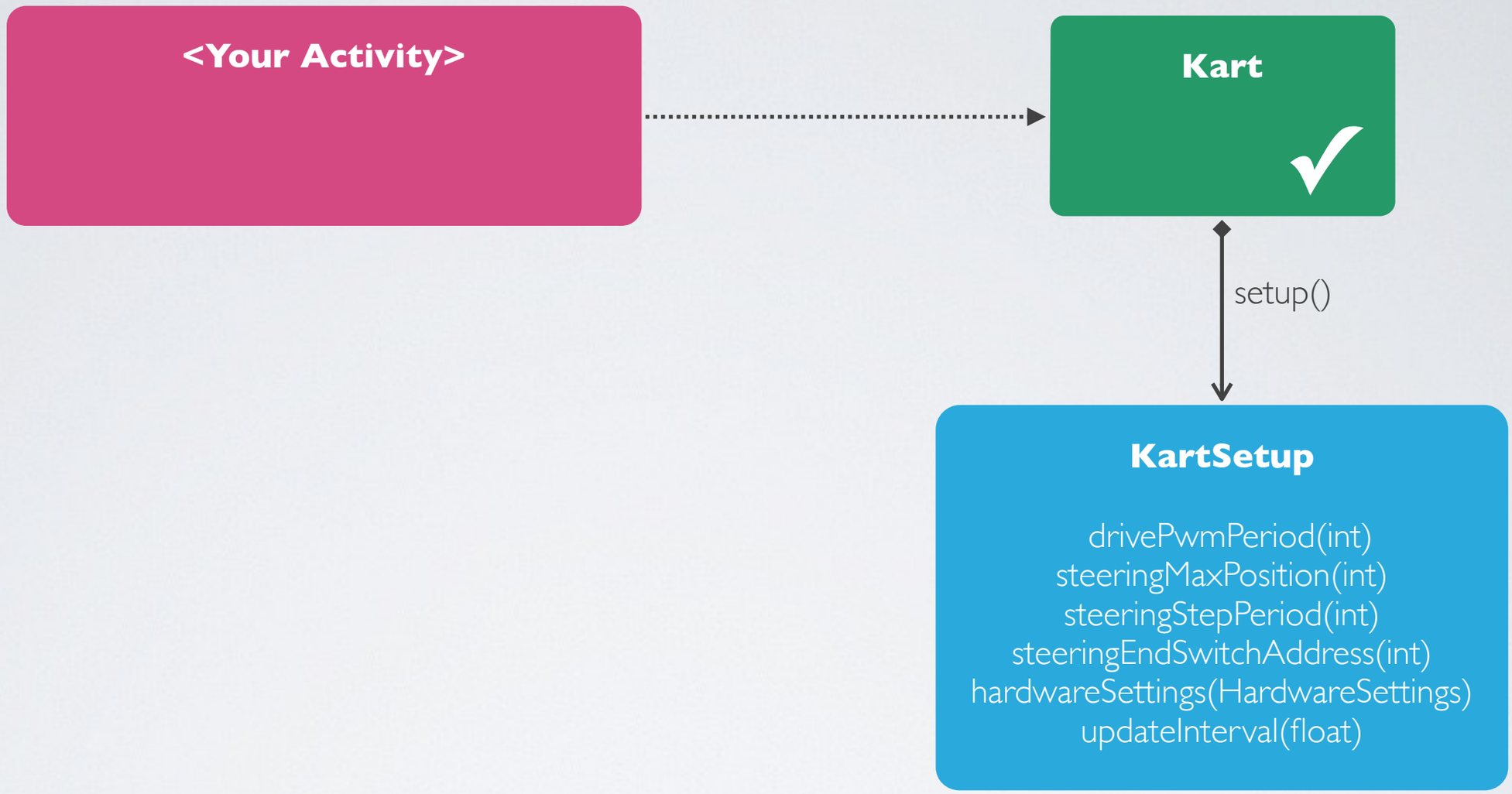


```
void onCreate(Bundle savedInstanceState) {
    …
    kart.setup().drivePwmPeriod(50).steeringStepPeriod(25).updateInterval(100);
    …
}
```

Software Goals

- **Slider control**
  - Direction
  - Speed
- **Progress Bar status**
  - Battery level
  - Steering position
- **Accelerometer (Orientation) control**
  - Button to enable orientation control
  - Device orientation controls sliders or kart

Software Grade

Functional blackbox tests during morning of the last day

All mandatory features

Direction control
Speed control
Battery display
Direction display

→ 4.0

+

0.5 ← **Per optional feature**

LED's
Ultrasound sensor
Proximity sensor
Hall sensor
Steering assistant
Other improvements

=

Grade

Android Studio

Hes·so VALAIS WALLIS
Haute Ecole d'Ingénierie
Hochschule für Ingenieurwissenschaften

LatLngAdditions.java – [app] – AVelov – [~/Documents/Perso/AVelov] – Android Studio (I/O Preview) AI-130.716844

AVelov › app › src › main › java › com › cyrilmottier › android › citybikes › maps › LatLngAdditions

Project

- instrumentTest
- main
  - assets
  - java
    - com
      - android.util
      - cyrilmottier.android.citybikes
        - app
        - content
        - database
        - maps
        - net
        - provider
        - service
        - text
        - util
        - widget
        - AboutActivity
        - AboutFragment
        - Api
        - FavoritesListFragment
        - LauncherActivity
        - LicensesActivity
        - LicensesFragment
        - MainActivity
        - MapFragment
        - SearchActivity
        - SearchFragment

LatLngAdditions.java

```
12  public final class LatLngAdditions {
13
14      private LatLngAdditions() {
15          // Do not instantiate
16      }
17
18      /**
19       * The minimum possible latitude
20       */
21      public static final double MIN_LATITUDE = -90d;
22
23      /**
24       * The maximum possible latitude
25       */
26      public static final double MAX_LATITUDE = 90d;
27
28      /**
29       * The minimum possible longitude
30       */
31      public static final double MIN_LONGITUDE = -180d;
32
33      /**
34       * The maximum possible longitude</code>.
35       */
36      public static final double MAX_LONGITUDE = getMaxLongitude();
37
38      @TargetApi(Build.VERSION_CODES.GINGERBREAD)
39      private static double getMaxLongitude() {
40          if (Build.VERSION.SDK_INT < Build.VERSION_CODES.GINGERBREAD) {
41              return 0x1.67fffffffffffp7;
42          }
43          return Math.nextAfter(180d, -1d);
44      }
45
46  }
```

TODO | 6: Android | Event Log

19:25 LF UTF-8 328M of 711M

Android Studio

Hes·so VALAIS WALLIS
Haute Ecole d'Ingénierie
Hochschule für Ingenieurwissenschaften

Download the Kart project template from the wiki

Extract the archive to the local disk

Import the extracted folder in Android Studio

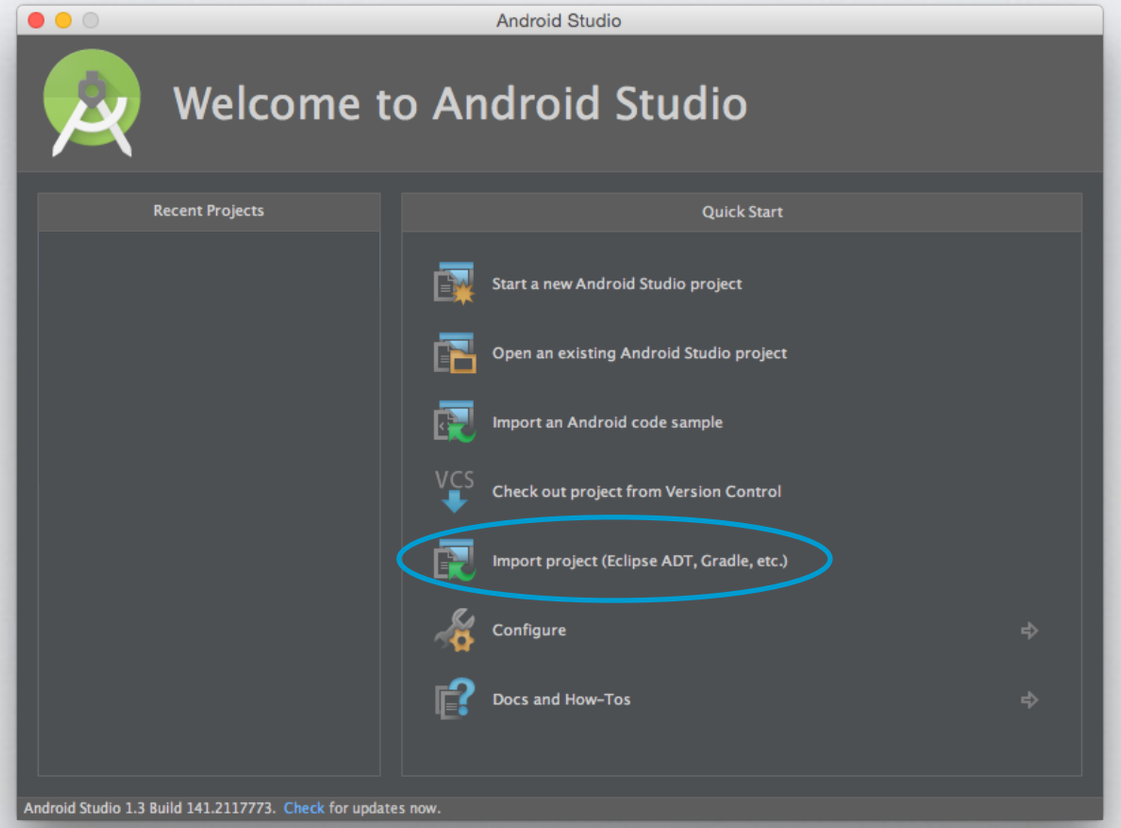

Install Demo

Download **Kart.apk** from

http://wiki.hevs.ch/fsi/index.php5/Kart

```
C:\Users\uadmin>cd "c:\Program Files (x86)\Android\android-sdk\platform-tools\"

c:\Program Files (x86)\Android\android-sdk\platform-tools>adb install c:\Users\uadmin\Downloads\Kart.apk
3979 KB/s (937315 bytes in 0.230s)
        pkg: /data/local/tmp/Kart.apk
Success

c:\Program Files (x86)\Android\android-sdk\platform-tools>
```