Amontec
Logic Road 123
1641 VUIPPENS
SWITZERLAND
www.amontec.com

HEVs
rte du Rawyl 47
1950 SION
SWITZERLAND
www.hevs.ch

HEB_ROTARY : HIGHER EDUCATIONAL BOARD, ROTARY SWITCH MODULE

PAGE NO	PAGE NAME	DESCRIPTION	MOST IMPORTANT COMPONENTS
1	COVER	THIS PAGE	NO COMPONENT
2	VERSION	MODIFICATION SHEET WITH VERSION CONTROL	NO COMPONENT
3	INTERFACE	HEB POINT TO POINT INTERFACE	HEB POINT TO POINT CONNECTOR
4	SWITCH	ROTARY SWITCHES (HEX VALUE)	4 SWITCHES

HEB (Higher Educational Board) heb_rotaryCOVER	DES	01 SEPT 03 Laurent Gauch
	REV	v1.0
Copyright (C) 2003, Amontec & HEVs	1/4	/project/heb/heb_rotary heb_rotary.sch

Amontec
Logic Road 123
1641 VUIPPENS
SWITZERLAND
www.amontec.com

HEVs
rte du Rawyl 47
1950 SION
SWITZERLAND
www.hevs.ch

VERSION MANAGEMENT

DATE	VERSION	DESCRIPTION	AUTHOR
01 SEPT 2003	1.0	FIRST VERSION	GAUCH LAURENT

HEB (Higher Educational Board) heb_rotaryVERSION	DES	01 SEPT 03 Laurent Gauch
	REV	v1.0
Copyright (C) 2003, Amontec & HEVs	2/4	/project/heb/heb_rotary heb_rotary.sch

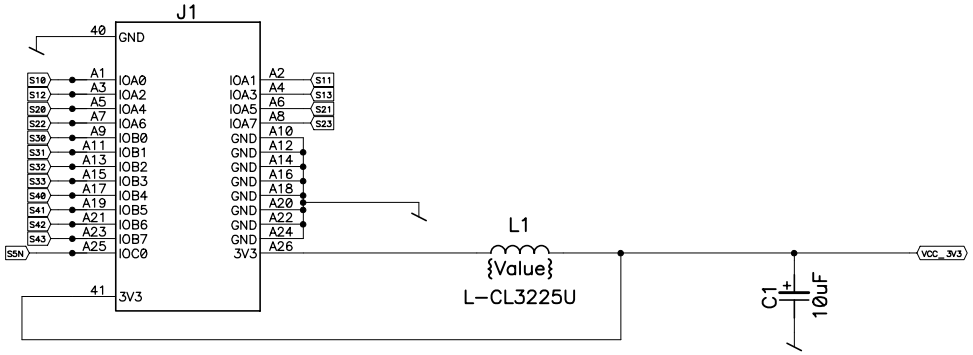

HEB (Higher Educational Board) heb_rotary : INTERFACE	DES	01 SEPT 03 Laurent Gauch
	REV	v1.0
Copyright (C) 2003, Amontec & HEVs	3/4	/project/heb/heb_rotary heb_rotary.sch

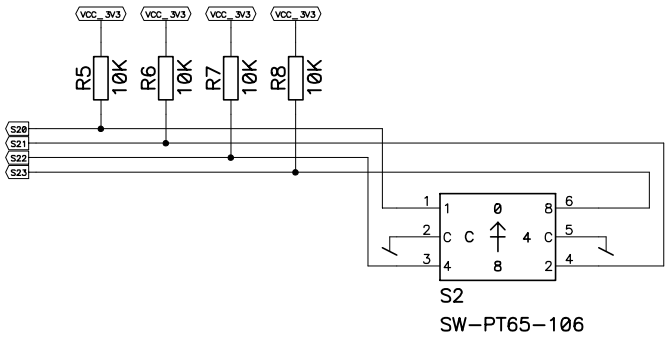

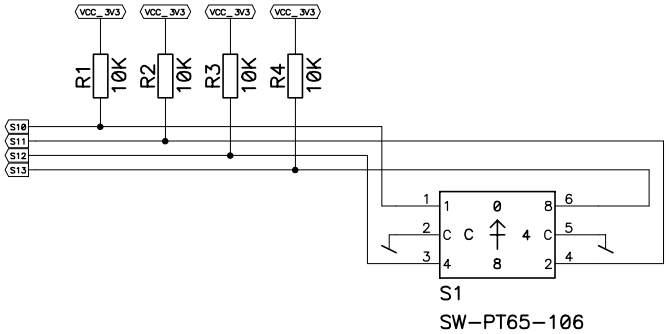

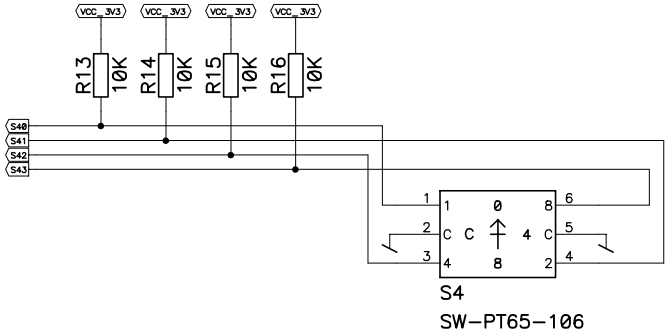

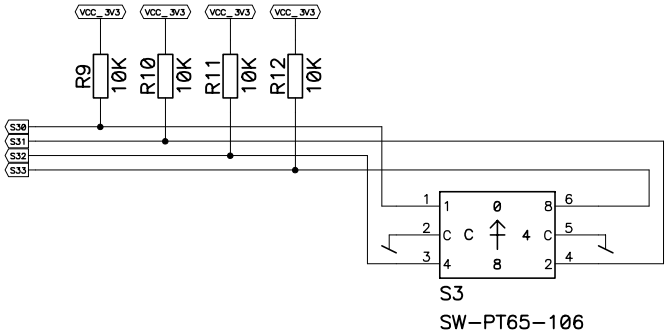

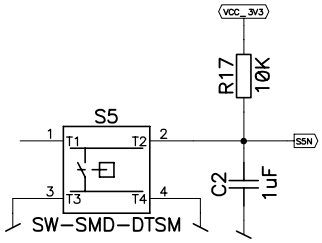

HEB (Higher Educational Board) heb_rotary : SWITCH	DES	01 SEPT 03 Laurent Gauch
	REV	v1.0
Copyright (C) 2003, Amontec & HEVs	4/4	/project/heb/heb_rotary heb_rotary.sch